TRIODE ELECTRONICS JTM-50 “Black Flag” LAYOUT

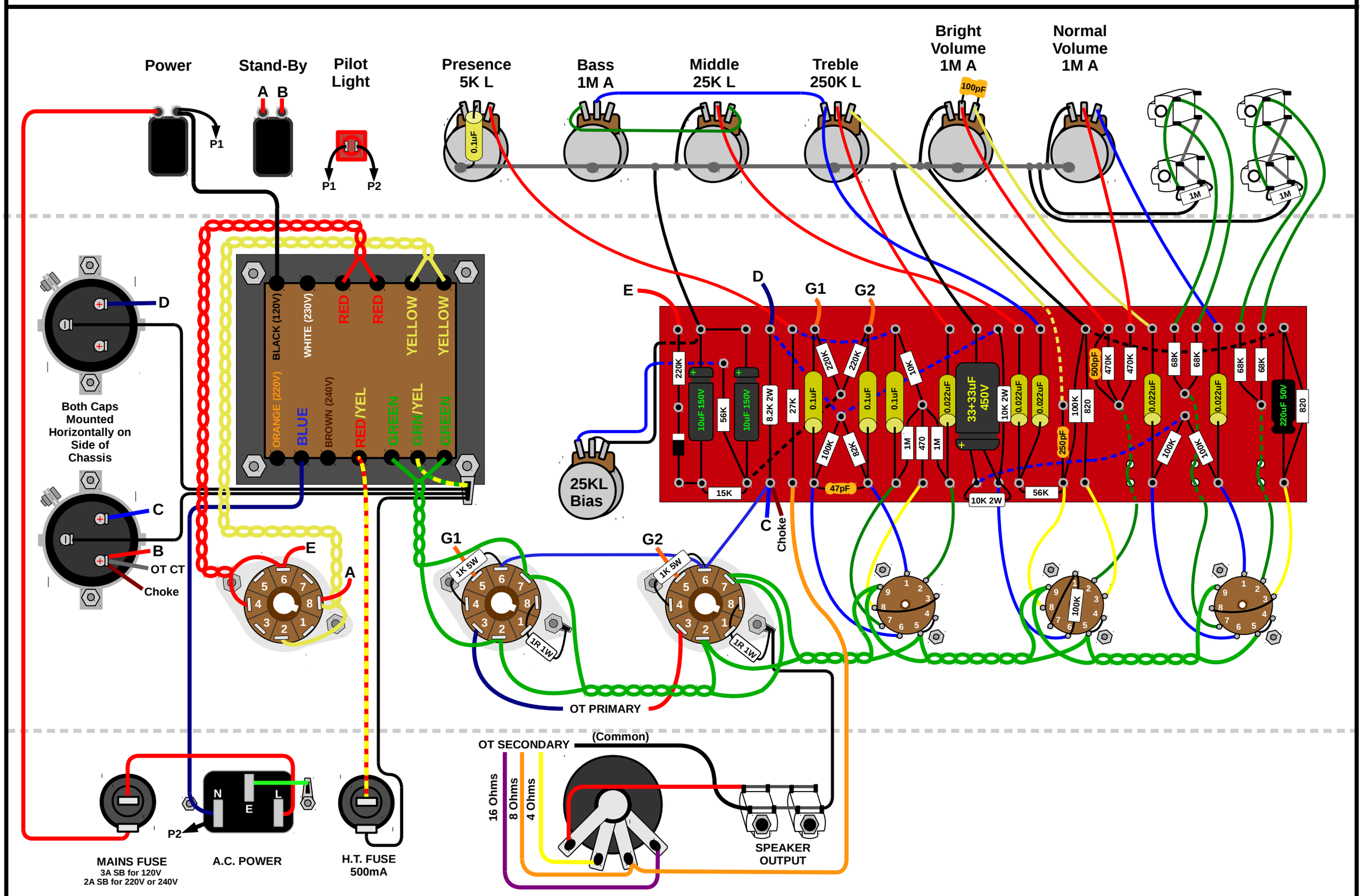

Bias Adjustment for EL34's:

1) With speaker load connected, turn power “ON” and let tubes warm up. Switch standby to "ON."

2) Set your meter to the Highest DC volts setting (600V or higher), and put the common (ground) lead on one of the chassis mounting nuts or alligator clip it to the chassis. Touch the positive lead to Pin 3 (plate) of one of the EL34 power tube sockets. This is your Plate Voltage. Write it down.

BE VERY CAREFULL WITH THIS STEP (HIGH VOLTAGES PRESENT)

3) EL34's are 25 watts maximum dissipation and you want to set the bias to 70% max dissipation. (70% = 17.5 watts) Divide your desired wattage by the plate voltage that you wrote down from step 2. (example: 17.5/420 = . 042 or 42mV) This is your desired bias voltage (probably between 35 and 45 mV).

4) Set your meter to lowest DC Volts setting (200mV or less) and touch the common (ground) lead to the grounded side of the 1 ohm resistor coming off of Pin 1 and the positive lead to the Pin 1 side. Adjust the bias potentiometer until the bias voltage you calculated from from Step 3 is achieved.

Plate voltage will change a little when adjusting the bias, so you may need to take another reading from Pin 3 and adjust your equation accordingly and repeat steps 3 & 4.

Notes:

*Check Polarity (+ & -) of all Electrolytic Capacitors.
*You may need to lightly sand the back of the potentiometers to be able to solder the bus wire correctly.
*The original JTM50's did not use the 1K 5W screen resistors. Unless you plan on using rather robust EL34's (Original Mullard's), we recommend installing these resistors.
*All Resistors are 1/2W Unless Noted
*Power Transformer: 40-18033
*Output Transformer: 40-18025
*Choke: 40-18059 (20H), or 40-18032 (5H)
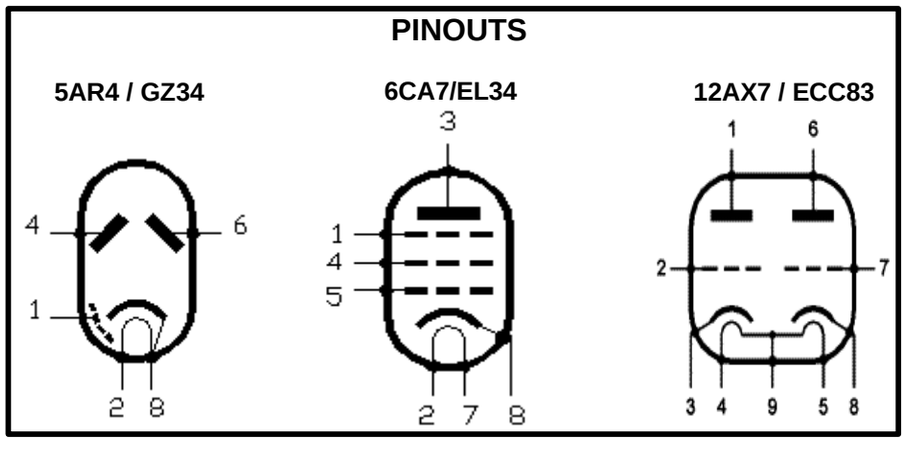
For Technical Questions or Comments, Email us at: tech@triodestore.com