TRIODE ELECTRONICS 5F1 TWEED CHAMP LAYOUT

120V Operation w/ 40-18027 Power Transformer &
40-18031 (15W) Output Transformer

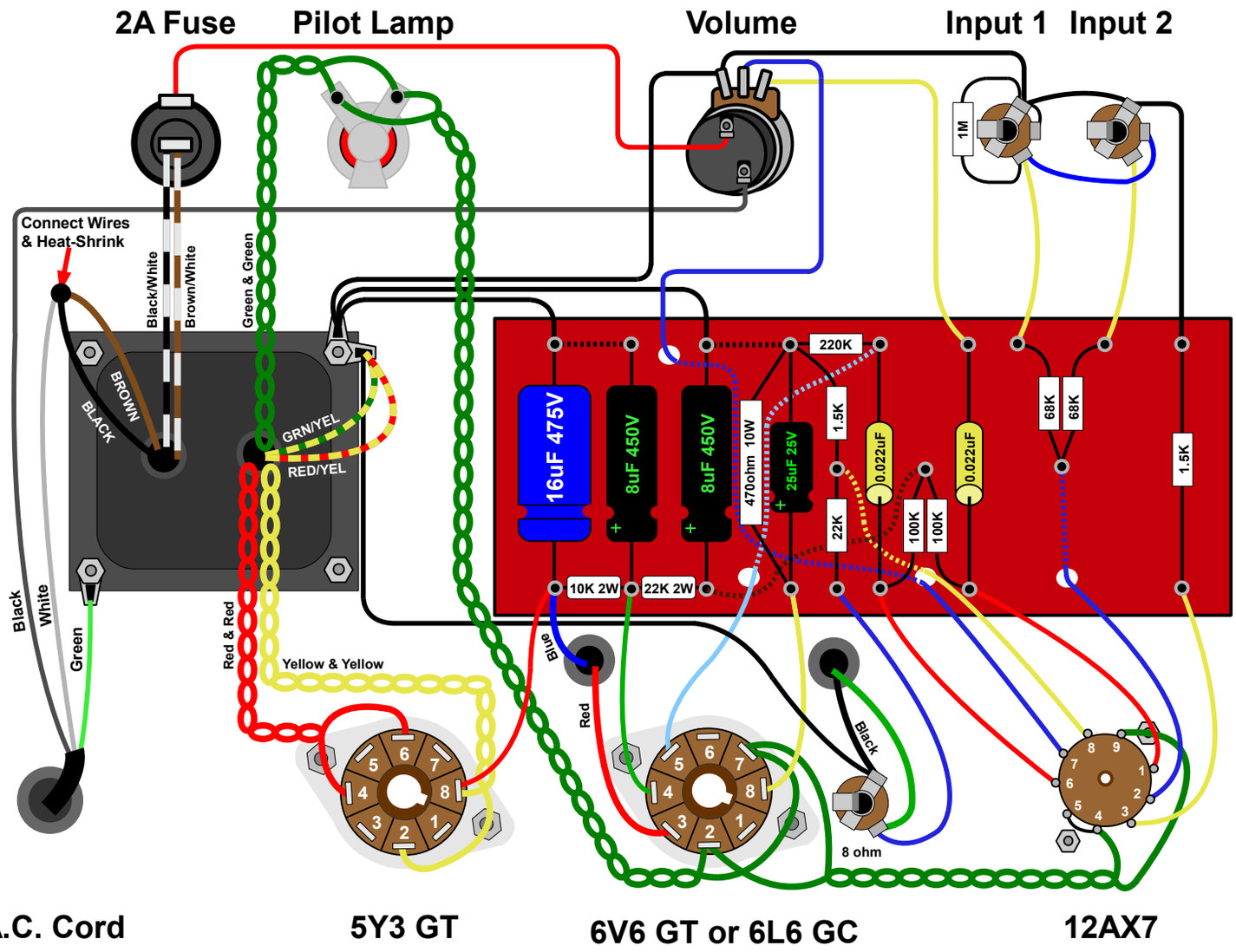

Notes:

*Twist filament wires together tightly.
*Check Polarity (+ & -) of all Electrolytic Capacitors.
*Brown Wire from Output Transformer & Both Red/White Wires from the Power Transformer are Not Used. These should be tied off and insulated.
(Do Not Connect Together!)
*Yellow Wire from Output Transformer is a 4 ohm tap, Grey Wire is 16 ohm tap, if you don't wish to use these, tie them off and insulate.
*All Resistors are 1/2W Unless Noted Otherwise.
*Power Transformer: 40-18027
*Output Transformer: 40-18031
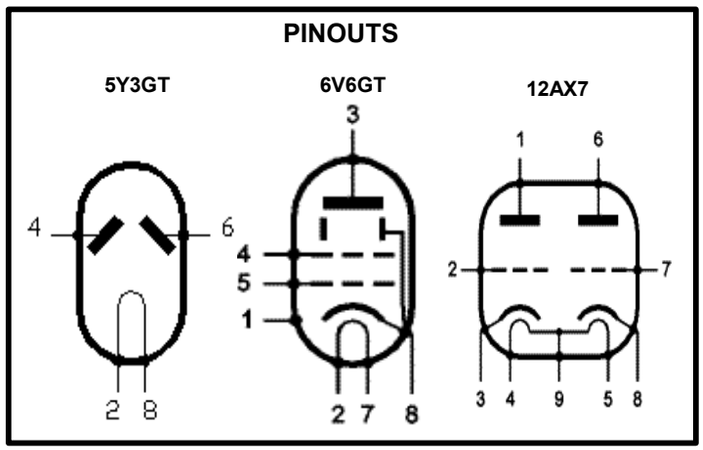
For Technical Questions or Comments, Email us at:
questions@triodestore.com