TRIODE ELECTRONICS 5E3 TWEED DELUXE LAYOUT

240V Operation w/ 40-18017 Power Transformer

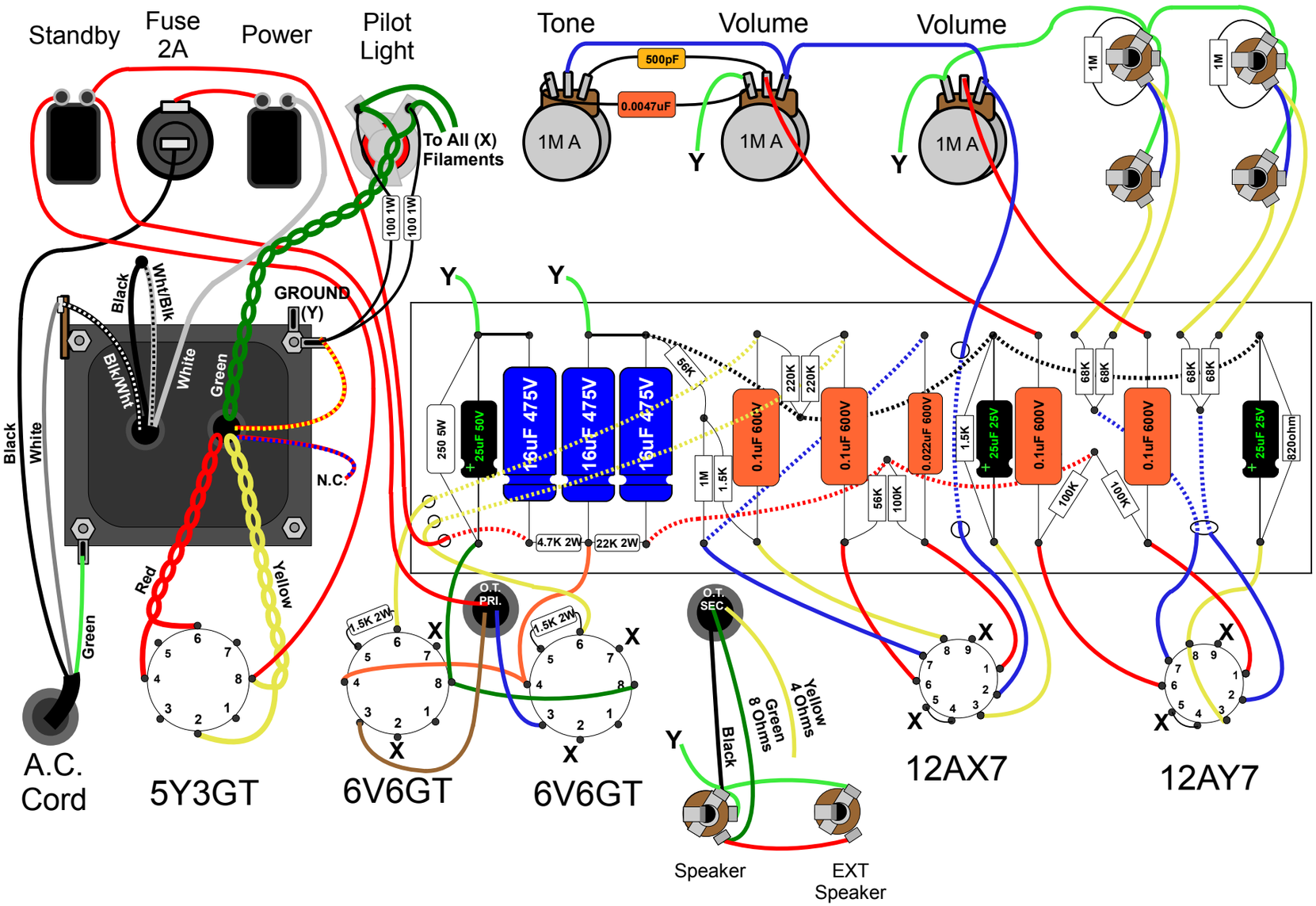

Notes:
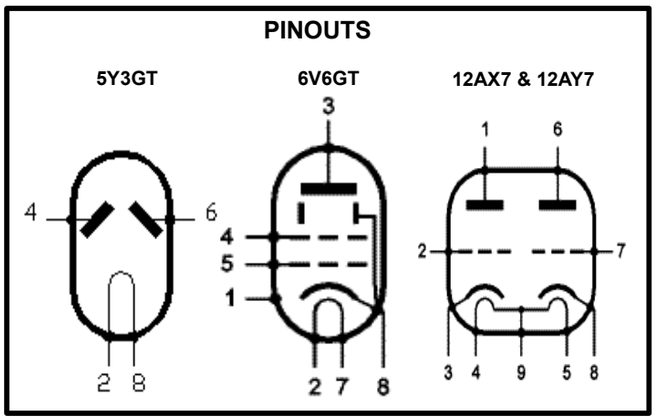
***Twist filament wires together tightly**
***Brown/White & Blue/White wires from OT are screen taps used for UL operation. These wires are not connected in this amplifier.**
***Red/Blue Wire from PT is a 50V Bias Tap, this wire is not connected in this amplifier**
***Black & Wht/Blk Wires from PT should be connected together and heat-shrinked.**
***Check Polarity (+ & -) of all Electrolytic Capacitors.**
***All Resistors are 1/2W Unless Noted**
For Technical Questions or Comments, Email us at:
questions@triodestore.com